Copyright © 2019 Flashclad Eurobord

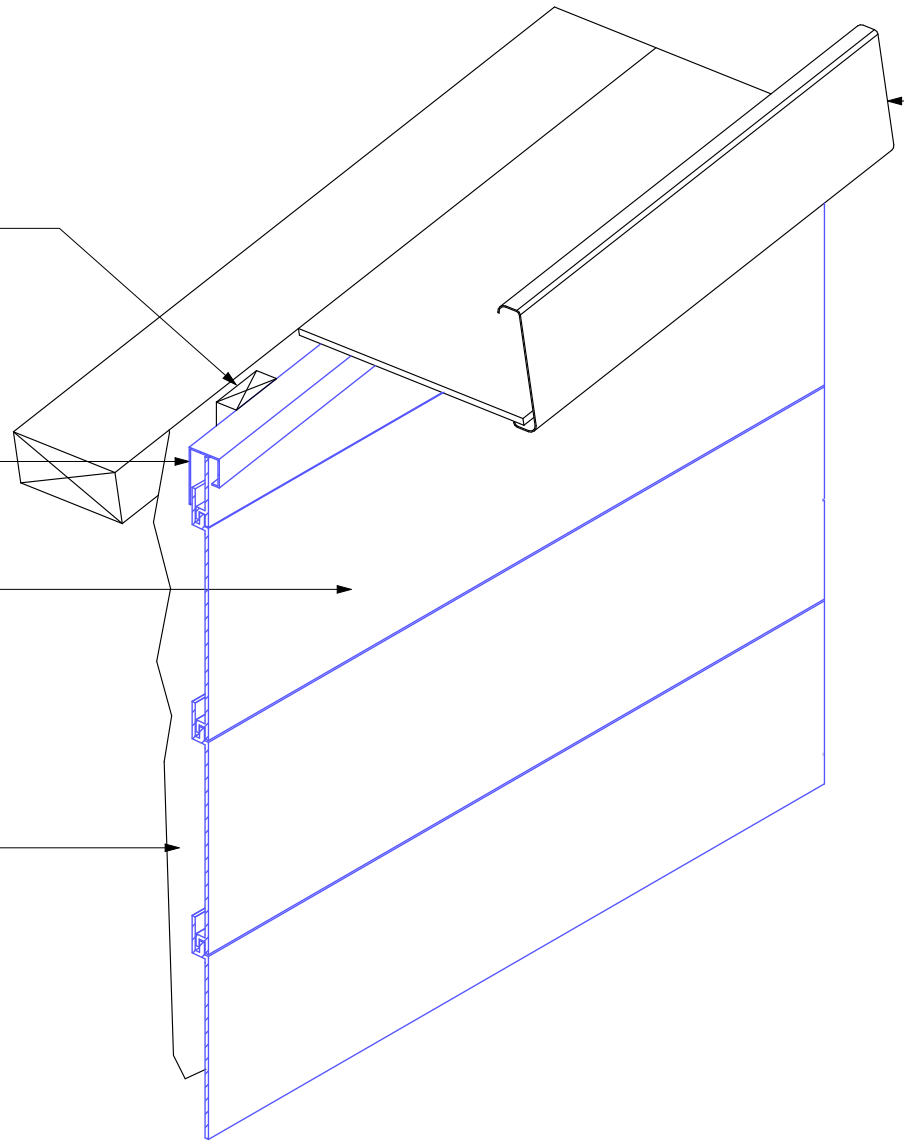

Flashclad
CLADDING FOR LIFE

RAKING EAVE JUNCTION

Not to Scale

Revision - 01 October 2019

Eurobord

HORIZONTAL