Copyright © 2019 Flashclad Eurobord

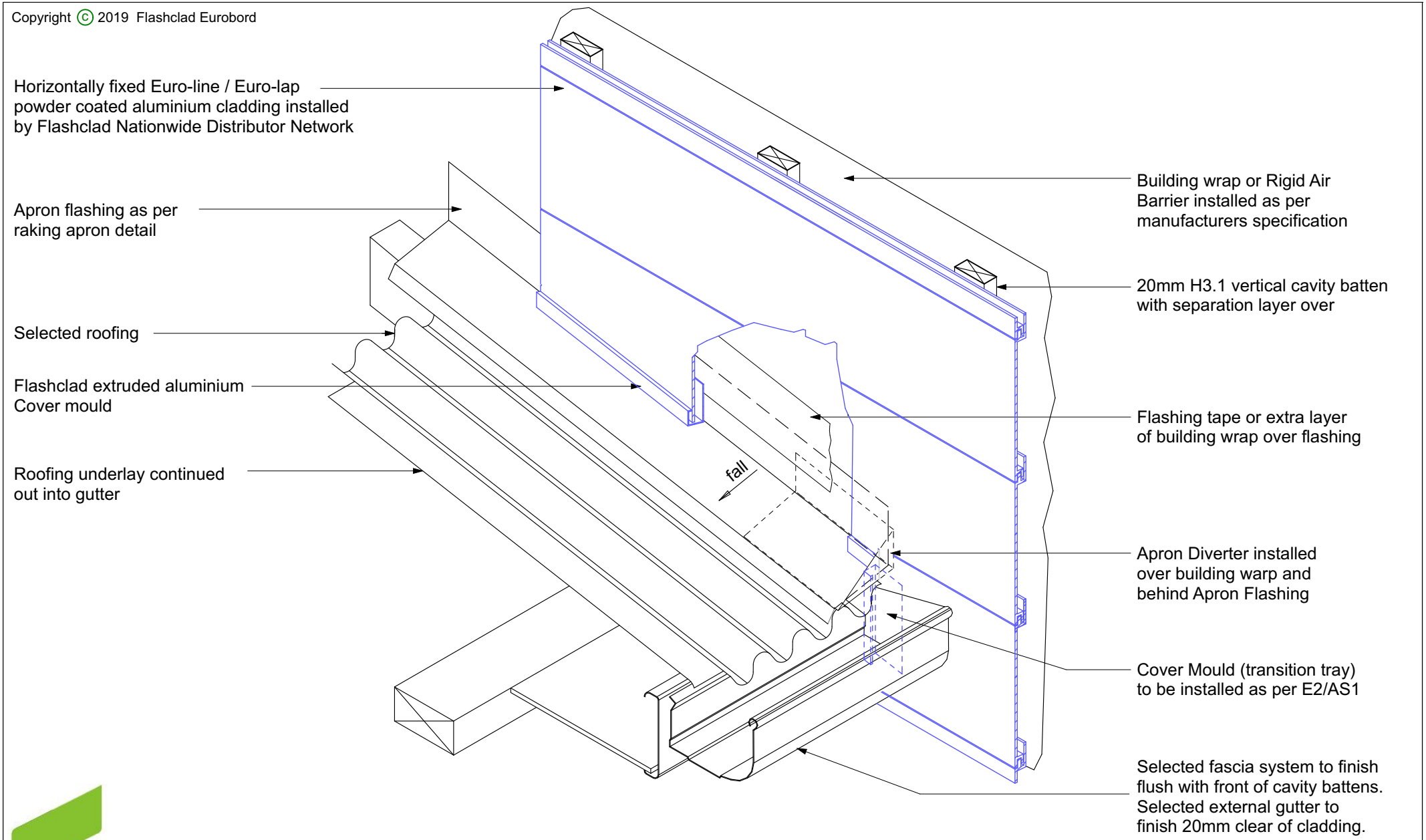

Flashclad
CLADDING FOR LIFE

GUTTER TO WALL JUNCTION

Not to Scale

Revision - 01 October 2019

Eurobord
HORIZONTAL